# Technical data sheet

## Clamp clip 2056 N-foot, 2-fold, plastic pressure sleeve, FT

## Item number: 1187203

Clamp clip with N-foot, plastic pressure sleeve made of polypropylene. For vertical and horizontal mounting of 2 single cables on a C-profile rail. For slot width 11–12 mm With 1-start screw thread on pressure sleeve, universal hexagonal screw head WAF10, with slot and cross recess. Suitable for assembly indoors and outdoors. Multiple cables should be separated by double sleeves. We recommend the use of a counter-sleeve.

HALOGEN FREE | CE | 11-12 | N

St Steel

FT Hot-dip galvanised

### Master data

| | |
|---|---|
| Item number | 1187203 |
| Type | BS-N2-K-12 FT |
| Description 1 | Clamp clip 2056 |
| Description 2 | double |
| Manufacturer | OBO |
| Dimension | 08-12mm |
| Material | Steel |
| Surface | Hot-dip galvanised |
| Surface standard | DIN EN ISO 1461 |
| Smallest sales unit | 50 |
| Unit of quantity | Piece |
| Weight | 3.5 kg |
| Weight unit | kg/100 pc. |
| CO2 Footprint (GWP) Cradle-to-Gate | 0,1329 kg CO2e / 1 Piece |

# Technical data sheet

## Clamp clip 2056 N-foot, 2-fold, plastic pressure sleeve, FT

## Item number: 1187203

### Dimensions

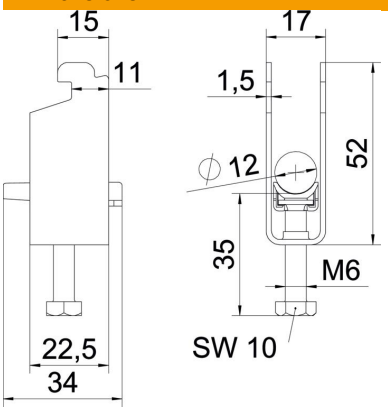


| | |
|---|---|
| Length | 22.5 mm |
| Width | 17 mm |
| Height | 52 mm |
| Plate thickness | 1.5 mm |
| Dimension A | 22.5 mm |
| Dimension B | 17 mm |
| Dimension C | 34 mm |
| Dimension G (mm) | M6 |
| Dimension H | 52 mm |
| Dimension L | 47 mm |
| Dimension t | 1.5 mm |

### Technical data

| | |
|---|---|
| Number of cables/pipes | 2 |
| For pipe diameter, max. | 12 mm |
| For pipe diameter, min. | 8 mm |
| for rail with slot width (with interval), max. | 12 mm |
| for rail with slot width (with interval), min. | 11 mm |
| Thread | M6 |
| Halogen-free | yes |
| Length of external dimensions | 34 mm |
| Max. Tightening torque | 3 Nm |
| With plastic trough | yes |
| Mounting type | Profile rail |
| Slot width | 10 mm |
| Clamping range D, max. | 12 mm |
| Clamping range D, min. | 8 mm |
| Surface addition | hot galvanised |
| Material addition | Steel |
| With counter-trough | no |
| Material of trough | Plastic |
| Material quality of trough | Polypropylene |